Self-serve Island Displays Supermarket Fridge- HSP25PA

Quick Overview

-Air cooling system
-Adjustable feet
-Drain fitted for easy cleaning

Description

Temperature Range	1~5℃
Standard Ambient	25 ℃,60% Rh
Type of Defrost	Automatic by heating
Temp control	Carel digital controller
Refrigerant	R290
Capacity (L)	320
Refrigeration cooling system	Fan cooling
Light	LED
Condenates drianage	Manual
Temperature display	Yes
Power	240V,50Hz, 10A Plug
Rate Power (W)	880
Energy Consumption [Khw/24hrS]	12.5

1 Years Parts and Labour warranty

Specifications

Net Weight (Kg)	190
Width (mm)	2560
Height (mm)	860
Depth (mm)	980
Packing Width (mm)	2730
Packing Height (mm)	1060
Packing Depth (mm)	1070
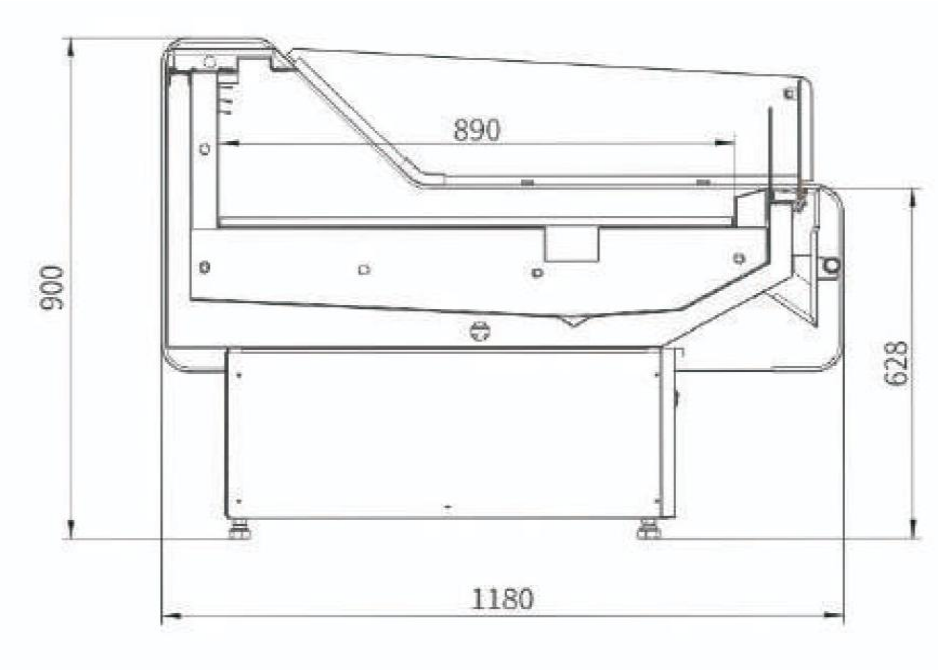
Figure